Status of ATMS development
(975 Science-Highlights, July-03)

- Kickoff in January 2001 –Contractor: (Aerojet) now—Northrop Grumman
- System CDR held in May of 2002
- Additional ΔCDRs on MMIC RF front-end electronics (subcontractor: BAE):

  (a) K and Ka bands—March, 2003

  (b) V & W bands—May, 2003

* NEΔT, calibration, etc., to meet reqm’ts

Frequencies

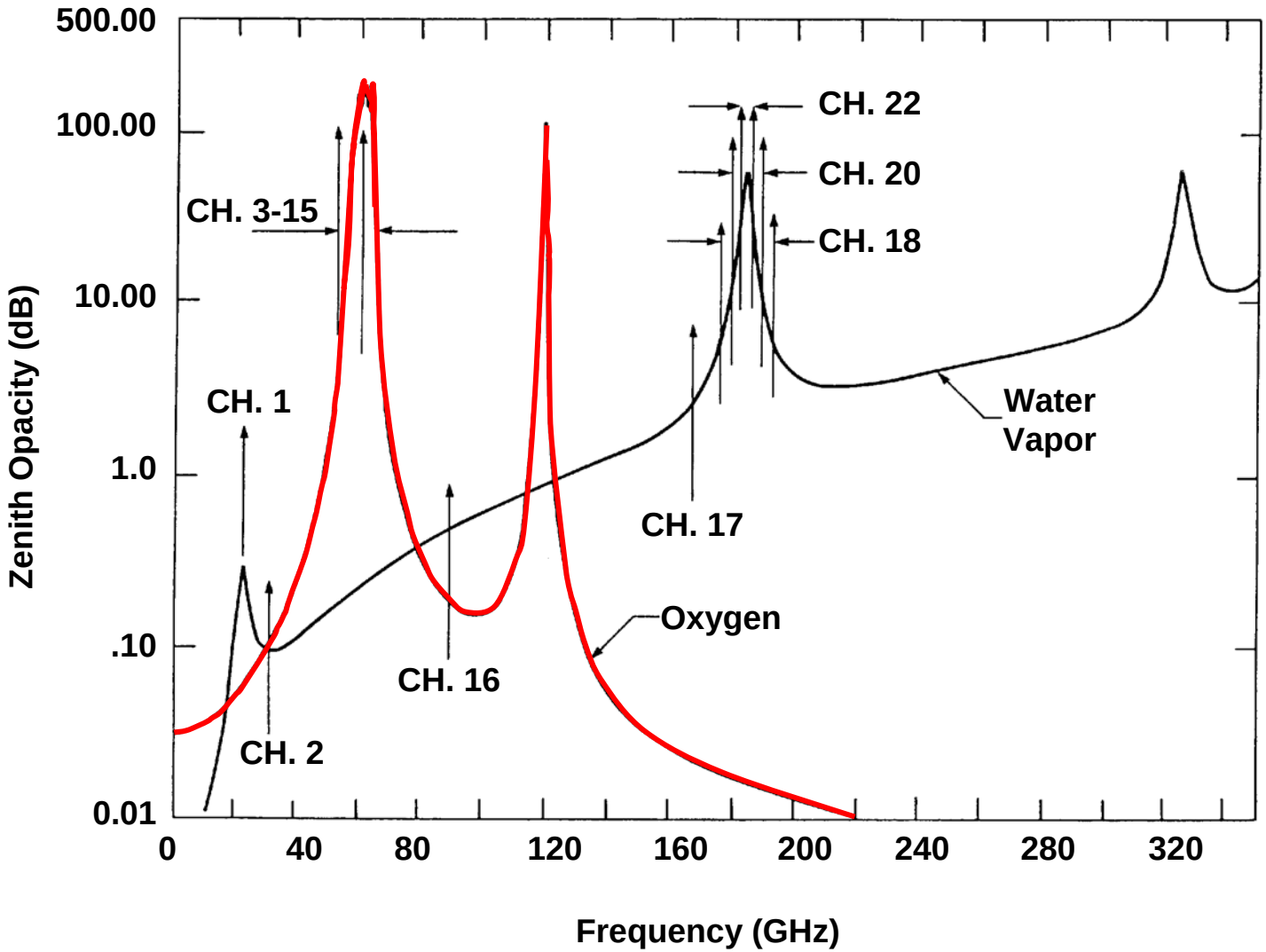

Channel Parameters

Channel	Frequency (Ghz)	Maximum Bandwidth (MHz)	Frequency Stability (MHz)	Static Beam Width θ_B (degrees)	Quasi Polarization V vertical H horizontal	NEΔT (K) Required	Calibration Accuracy (K) Required
1	23.8	0.27	<10	5.2	QV	0.90	1.00
2	31.4	0.18	<10	5.2	QV	0.90	1.00
3	50.3	0.18	<10	2.2	QH	1.20	0.75
4	51.76 [1]	0.40	<5	2.2	QH	0.75	0.75
5	52.8	0.40	<5	2.2	QH	0.75	0.75
6	53.596 ±0.115	0.17	<5	2.2	QH	0.75	0.75
7	54.40	0.40	<5	2.2	QH	0.75	0.75
8	54.94	0.40	<10	2.2	QH	0.75	0.75
9	55.50	0.33	<10	2.2	QH	0.75	0.75
10	57.290344	0.33	<0.5	2.2	QH	0.75	0.75
11	57.290344 ±0.217	0.078	<0.5	2.2	QH	1.20	0.75
12	57.290344±0.3222 ±0.048	0.036	<1.2	2.2	QH	1.20	0.75
13	57.290344 ±0.3222 ±0.022	0.016	<1.6	2.2	QH	1.50	0.75
14	57.290344 ±0.3222 ±0.010	0.008	<0.5	2.2	QH	2.40	0.75

Note 1 : Additional channel to those on AMSU and MHS

Channel Parameters (Cont.)

Channel	Frequency (Ghz)	Maximum Bandwidth (MHz)	Frequency Stability (MHz)	Static Beam Width θ_B (degrees)	Quasi Polarization	NEΔT (K) Required	Calibration Accuracy (K) Required
15	57.290344 ±0.3222 ±0.0045	0.003	<0.5	2.2	QH	3.60	0.75
16	87-91.9	2.0	<200	2.2	QV	0.50	1.00
17	165.5 [2]	3.0	<200	1.1	QH	0.60	1.00
18	183.31 ±7	2.0	<30	1.1	QH	0.80	1.00
19	183.31 ±4.5 [1]	2.0	<30	1.1	QH	0.80	1.00
20	183.31 ±3	1.0	<30	1.1	QH	0.80	1.00
21	183.31 ±1.8 [1]	1.0	<30	1.1	QH	0.80	1.00
22	183.31 ±1	0.5	<30	1.1	QH	0.90	1.00

Note 1 : Additional channel to those on AMSU and MHS
Note 2 : Modified Frequency from 150 GHz on MHS

QV, QH : quasi-vertical, quasi-horizontal polarizations

Scanning Characteristics

- Cross-track (for CrIS coincidence)
- Contiguous 1.1° cells
- Contiguous coverage at equator

Footprints (km)		
Chan	Δx	Beam width
1, 2	74.8	5.2°
3-16	31.6	2.2°
17-22	15.8	1.1°

Footprints (km)		
Chan	Δx	Δy
1, 2	323.1	141.8
3-16	136.7	60.0
17-22	68.4	30.0

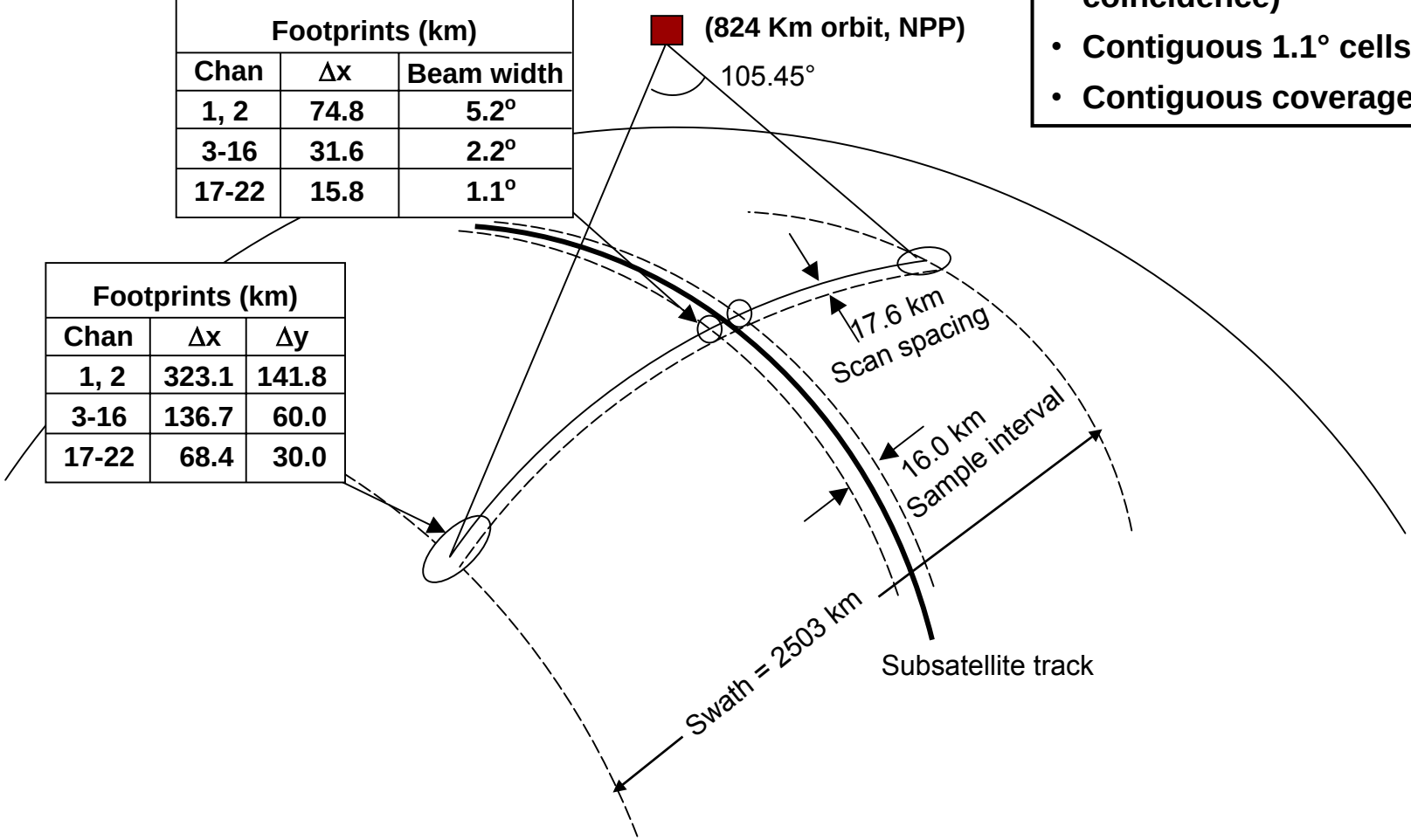

The ATMS Challenge

AMSU-A1

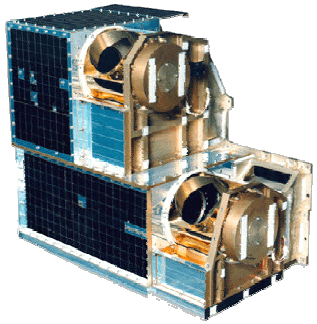

AMSU-A2

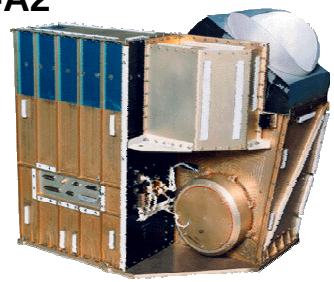

MHS

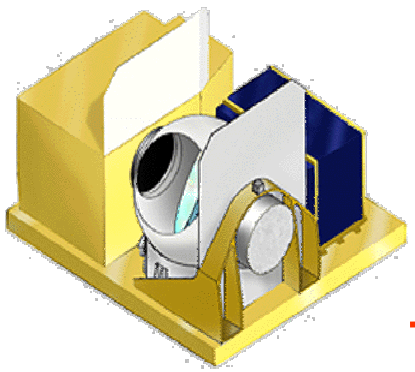

AMSU-(A1+A2) +MHS:
P~200 W, M~160 kg,
Vol >1 m^3

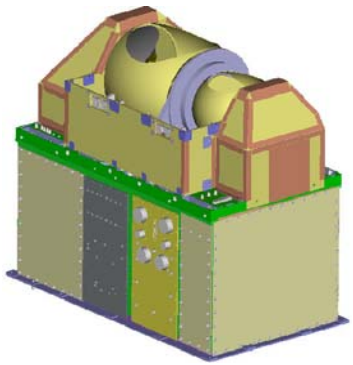

ATMS

- **70 x 40 x 60 cm**
- **98 W (now ~155 w, including conting.)**
- **78 kg**
- **7 year life**

ATMS Instrument

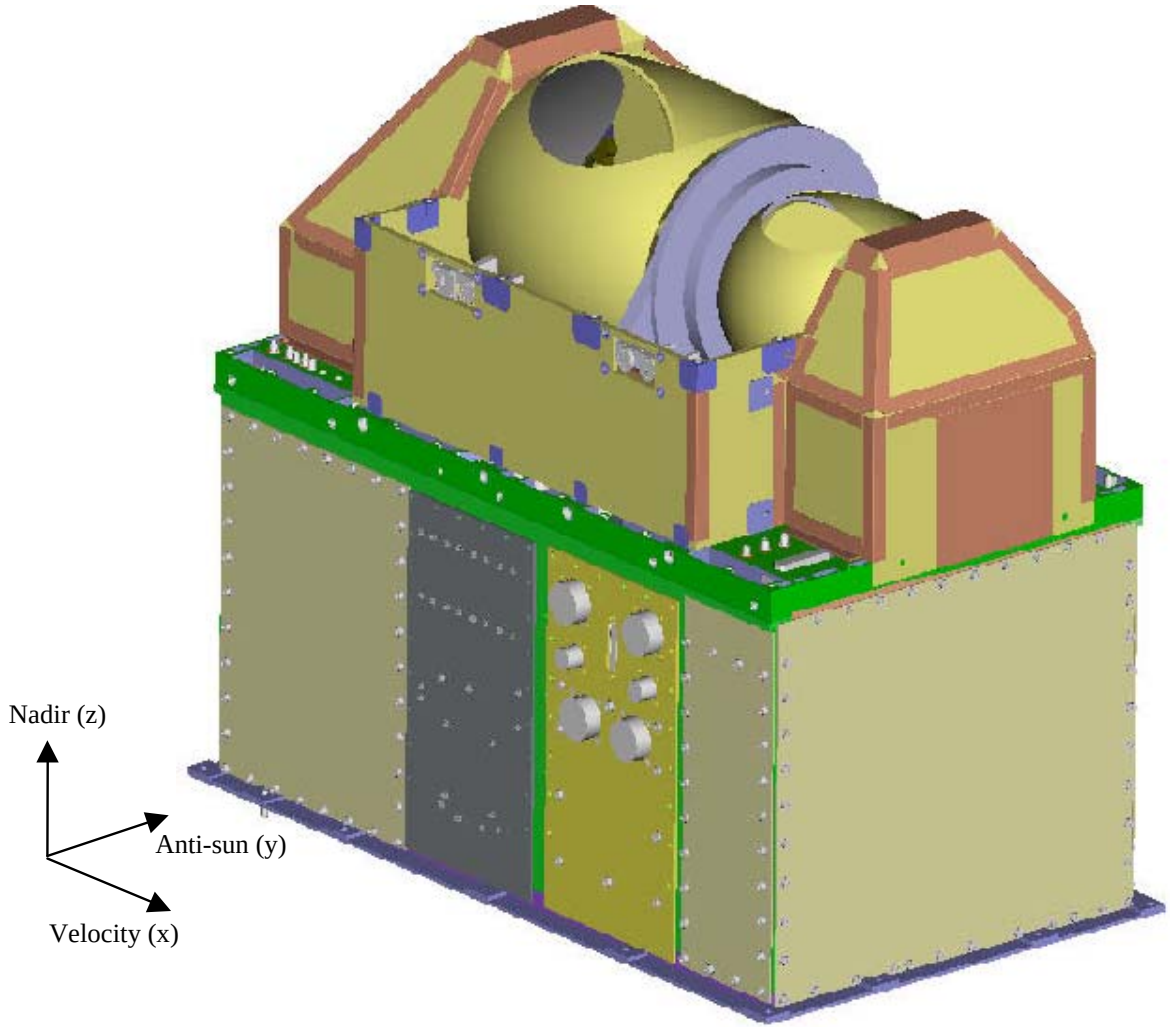
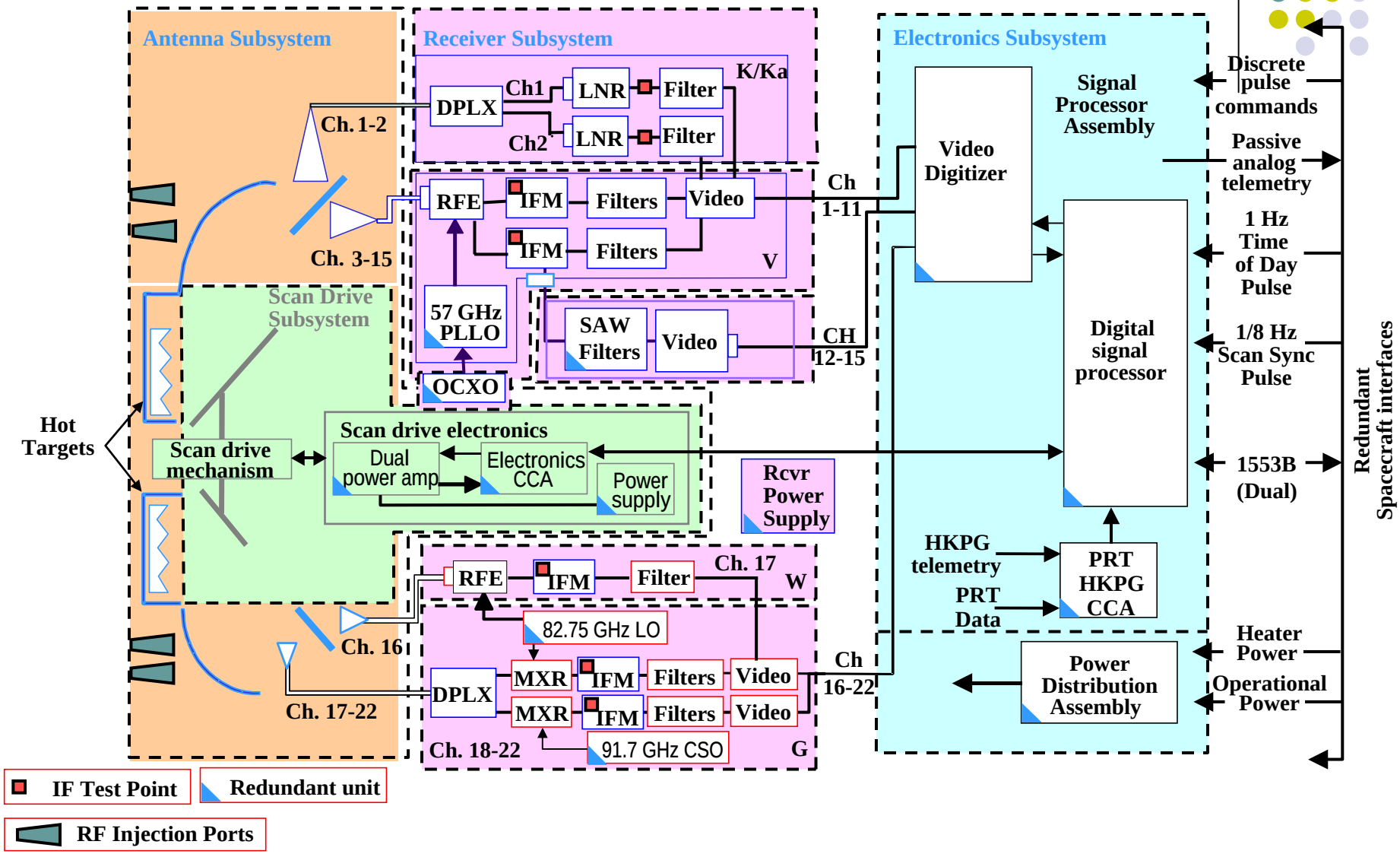
Functional Block Diagram